Maestro™ Chewblet® ice icemaker

MC400 Series

Top mount (A) air- or (W) water-cooled icemaker

MCD400ABT – 115V, 60Hz, air-cooled
MCE400ABT – 230V, 50Hz, air-cooled
MCD400WBT – 115V, 60Hz, water-cooled
MCE400WBT – 230V, 50Hz, water-cooled

Compact, reliable icemaker for use with Follett ice storage bins. Stainless steel exterior frame. Both air- and water-cooled models use environmentally-friendly R404A refrigerant. Production capacity up to 400 lbs (181kg) of Chewblet ice in a 24-hour period.

MCD400ABT icemaker shown on Follett 425-30 ice storage bin, sold separately

High performance Maestro icemakers

- Stainless steel evaporator, auger and top bearing
- Oversized, heavy duty, tapered roller bearings ensure long, low-maintenance life
- Icemaker can be cleaned without contaminating ice
- Quiet production; no noisy harvest cycles

Lower utility bills

- Energy-efficient, no costly defrost cycles
- 25% less energy than comparable capacity cube machines
- 40% less water than comparable capacity cube machines

Easy installation

- Cord and hospital-grade plug provided (230V models, cord only)

Space-saving design

- Compact design – only 18.875" wide x 20.75" deep x 17" high (479mm x 591mm x 432mm)
- Perfect for use on Follett's 30" (762mm) wide ice storage bin

Consumer-preferred Chewblet ice

- Easier and safer to chew than cubes
- More reliable dispensing than nugget or pellet ice
- Slow melting, maintains drink temperature and quality
- Drink performance comparable to cubes
- Higher displacement than cube ice
- Ice molds well for use in ice packs and food displays – 5/8" diameter x 1" (17mm x 26mm)

Accessories

- Water filter kit (item# 00130229)
- Ice scoop (item# ABICESCOOP)
- SafeCLEAN™ environmentally-responsible ice machine cleaner (item# 00132001)
- San Jamar Saf-T-Ice* Guardian scoop system (item# 00146365)

* Saf-T-Ice is a registered trademark of San Jamar, a division of the Coleman Group, Inc. in the United States.

FOLLETT™
Innovative solutions, inspired by ice

801 Church Lane • Easton, PA 18040, USA
Toll free (800) 523-9361 • (610) 252-7301
Fax (610) 250-0696 • www.follettice.com

© Follett Corporation
Form #2245

MC400 Series

Maestro™ Chewblet® ice icemaker

Front View
air- and water-cooled

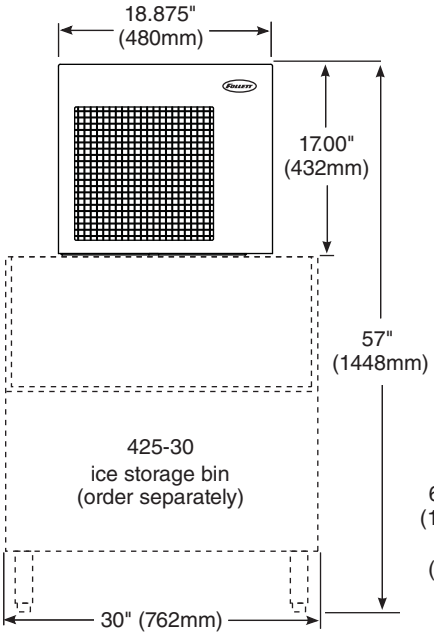

Back View
air-cooled

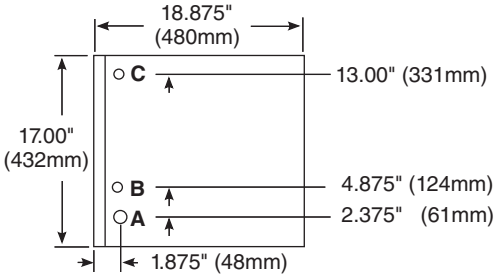

Back View
water-cooled

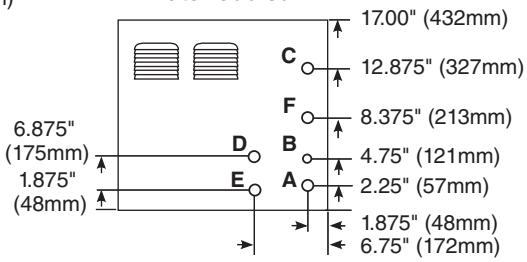

Side View
air- and water-cooled

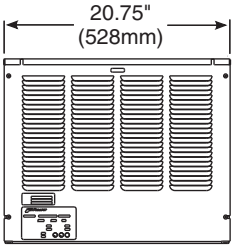

Plug Configuration NEMA 5-20

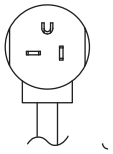

A – 3/4" MPT drain
B – 3/8" OD push-in water inlet
C – Electrical
D – 3/8" FPT condenser inlet (water-cooed only)
E – 3/8" FPT condenser drain (water-cooled only)
F – Bin signal cord

Ice Production

Air-cooled icemaker capacity/24 hrs.

Inlet Water Temperature ° F/C	Ambient Air Temperature F/C						
F	60	70	80	90	100		
C	16	21	27	32	38		
50	510	454	397	335	273	lbs.	
10	232	206	180	152	124	kg.	
60	482	435	389	329	270	lbs.	
16	219	198	177	150	123	kg.	
70	454	417	380	323	266	lbs.	
21	206	190	173	147	121	kg.	
80	424	385	347	297	247	lbs.	
27	193	175	158	135	112	kg.	
90	394	354	313	270	227	lbs.	
32	179	161	142	123	103	kg.	

Water-cooled icemaker capacity/24 hrs.

Inlet Water Temperature ° F/C	Ambient Air Temperature F/C						
F	60	70	80	90	100		
C	16	21	27	32	38		
50	451	447	442	437	428	lbs.	
10	204	202	200	199	194	kg.	
60	423	413	409	399	394	lbs.	
16	192	187	185	181	179	kg.	
70	394	390	380	371	361	lbs.	
21	179	177	172	168	163	kg.	
80	371	361	352	342	333	lbs.	
27	168	163	160	155	151	kg.	
90	352	342	333	323	309	lbs.	
32	160	155	151	146	140	kg.	

Required Clearances

When icemaker mounted with condenser facing rear of bin: 6" left and right

Operating Limits

Ambient air temp. range – 50 F to 100 F (10 C to 38 C)
Water temp. range – 45 F to 90 F (7 C to 32 C)
Potable water pressure – 10 psi to 70 psi (69kpa to 483kpa)
Condenser water pressure – 10 psi to 150 psi (69kpa to 1035kpa)

Standard electrical – MCD models, 115V, 60Hz, 1 phase, 11.0 amps, max. fuse 20 amps. Cord and plug provided with each icemaker, separate circuits required for each. If local code requires hard-wiring, separate disconnects also required.

Alternate electrical – MCE models, 230V, 50Hz, 1 phase, 6.5 amps, max. fuse 20 amps. Cord only. Wire in accordance with all local codes.

Approximate Shipping Weight 160 lbs (73kg)

Dimensions

Overall Dimensions		
Height	Depth	Width
17.0" (432mm)	20.75" (528mm)	18.875" (480)

Water Flow Requirements for Water-Cooled Condensers

Water Temp. F°/C°	70/21
Water Flow: Gallons/100 lbs of ice Liters/45 kg of ice	 73 276

Energy Consumption

KWH per 100 lbs (46kg) ice†	
Air-cooled	5.7
Water-cooled	5.5

† Air temp. 90 F (32 C); water temp. 70 F (21 C)

Heat Rejection Data

Model	Heat rejected in BTU/hr	
	to air	to water
Air-cooled	5000	n/a
Water-cooled	1400	3600

Water consumption

12.6 gal (48L) of potable water usage per 100 lbs (46kg) of ice.

Maestro and SafeCLEAN are trademarks of Follett Corporation.
Chewblet is a registered trademark of Follett Corporation, registered in the US.
Follett reserves the right to change specifications at any time without obligation. Certifications may vary depending on country of origin.

FOLLETT™
Innovative solutions, inspired by ice

801 Church Lane • Easton, PA 18040, USA
Toll free (800) 523-9361 • (610) 252-7301
Fax (610) 250-0696 • www.follettice.com

© Follett Corporation
Form #2245
03/09