Maestro™ Satellite-fill Chewblet® icemaker for Follett Harmony™ and bin applications

MC400BS
MC400HS
Series

Self-contained icemakers for Satellite-filling countertop ice and beverage dispensers:

MCD400AHS† – Air-cooled, self-contained, 115/60/1
MCC400AHS† – Air-cooled, self-contained, 220/60/1
MCE400AHS† – Air-cooled, self-contained, 230/50/1
MCD400WHS† – Water-cooled, self-contained, 115/60/1
MCC400WHS† – Water-cooled, self-contained, 220/60/1
MCE400WHS† – Water-cooled, self-contained, 230/50/1

Self-contained icemakers for Satellite-filling bins:

MCD400ABS† – Air-cooled, self-contained, 115/60/1
MCC400ABS† – Air-cooled, self-contained, 220/60/1
MCE400ABS† – Air-cooled, self-contained, 230/50/1
MCD400WBS† – Water-cooled, self-contained, 115/60/1
MCC400WBS† – Water-cooled, self-contained, 220/60/1
MCE400WBS† – Water-cooled, self-contained, 230/50/1

† Note: Must be used with Maestro Universal Satellite-fill Kit, item# 00182170, sold separately.

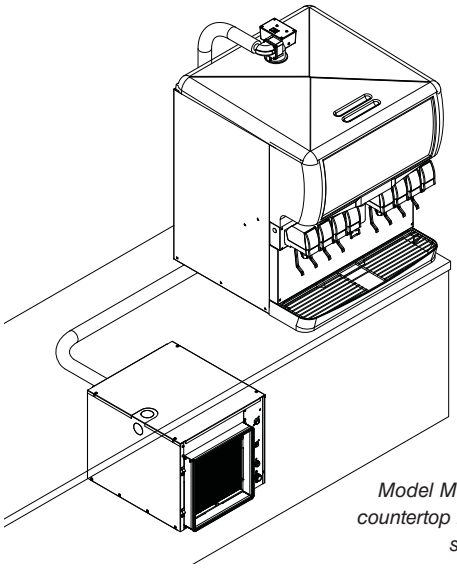

Model MCD400AHS Satellite-filling countertop ice and beverage dispenser, supplied by others

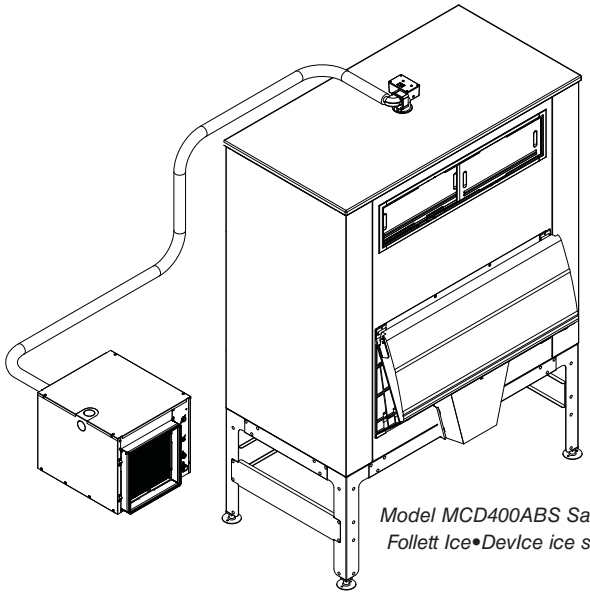

Model MCD400ABS Satellite-filling Follett Ice•DevIce ice storage bin

Compact, reliable air- and water-cooled icemakers for Satellite-filling countertop ice and beverage dispensers and Follett ice storage bins. Stainless steel exterior and interior frame. Environmentally-friendly R404A refrigerant. Production capacity approximately 400 lbs (181kg) of Chewblet ice in a 24-hour period.

High performance Maestro icemakers

- Stainless steel evaporator, auger and top bearing
- Oversized, heavy duty, tapered roller bottom bearing ensures long low-maintenance life
- Icemaker can be cleaned without contaminating ice
- Quiet production; no noisy harvest cycles

Lower utility bills

- Energy-efficient, no costly defrost cycles
- 25% less energy than comparable capacity cube machines
- 40% less water than comparable capacity cube machines

Satellite-fill capability

- Install icemaker up to 20 ft (6m) away from the bin or dispenser
- Improved aesthetics, serviceability
- Allows full access to dispensers for cleaning and sanitizing

Low-profile design

- Interface kit only 4" (102mm) high; more aesthetically pleasing than bulky cubers

Consumer-preferred Chewblet ice

- Easy to chew
- More reliable dispensing than nugget or pellet ice
- Slow melting, maintains drink temperature and quality
- Drink performance comparable to cubes
- Higher displacement than cube ice

Accessories

- Water filter kit (item# 00130229)
- Icemaker slide-out accessories (item# AFSLDFODAC for air-cooled, 00114123 for water-cooled) for easy slide out access to icemaker without disconnecting utilities
- 6.8" (173mm) icemaker stand, adjustable to 8.3" (211mm) (item# AFR400STND)
- Icemaker wall mount bracket (item# AFWALLMTBRKT)

FOLLETT
Innovative solutions, inspired by ice

801 Church Lane • Easton, PA 18040, USA
Toll free (800) 523-9361 • (610) 252-7301
Fax (610) 250-0696 • www.follettice.com

© Follett Corporation
Form #3490

MC400BS
MC400HS
Series

Maestro™ Satellite-fill Chewblet® icemaker for Follett Harmony™ and bin applications

U.S. Patent 6,134,908

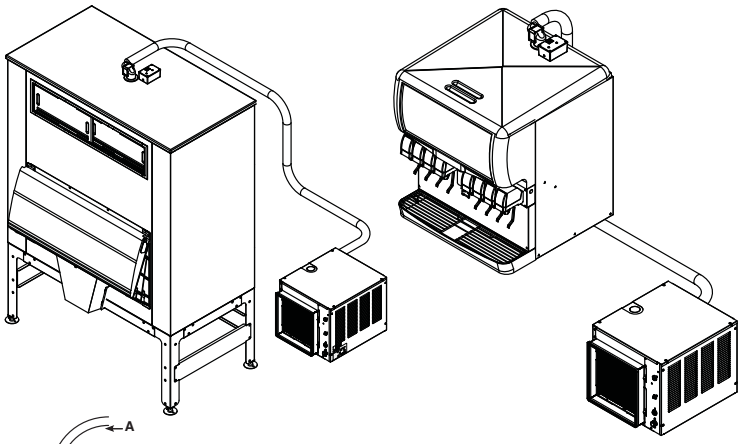

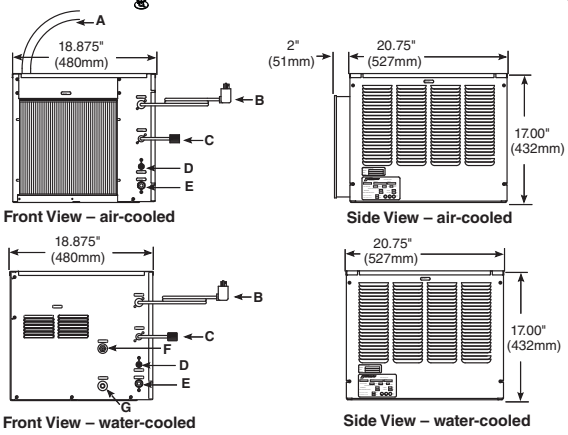

A - Ice transport tube	E - 3/4" MPT drain
B - Power, cord and plug set	F - 3/8" FPT condender inlet
C - Bin signal, cord and plug set	G - 3/8" FPT condenser drain
D - 3/8" OD push-in water inlet	

See Satellite-fill Icemaker Requirements form# 2075 for details

Icemaker Plug Configuration NEMA 5-20

Approved Dispensers

Ice & beverage dispensers manufactured by others, approved for Satellite-fill		
Cornelius DF/ED150BC Series	Cornelius IDC255	SerVend MD200
Cornelius DF/ED175BC Series	Lancer 4500-30N	SerVend MD250
Cornelius DF/ED200BC Series	Lancer FS-22N	SerVend MDH302
Cornelius DF/ED250BC Series	Lancer FS-30N	SerVend MDH402
Cornelius DF/ED300BC Series	Lancer FS-44N	SerVend SV175
Cornelius Flavor Fusion	SerVend MD150	SerVend SV200
Cornelius IDC215	SerVend MD175	SerVend SV250

All dispensers must be configured for nugget ice. See dispenser manufacturer for appropriate nugget ice kits, if required.

Ice Production

Air-cooled icemaker capacity/24 hrs.

Inlet Water Temperature ˚F/˚C	Ambient Air Temperature ˚F/˚C						
	F	60	70	80	90	100	
	C	16	21	27	32	38	
	50	510	454	397	335	273	lbs.
	10	232	206	180	152	124	kg.
	60	482	435	389	329	270	lbs.
	16	219	198	177	150	123	kg.
	70	454	417	380	323	266	lbs.
	21	206	190	173	147	121	kg.
	80	424	385	347	297	247	lbs.
	27	193	175	158	135	112	kg.
	90	394	354	313	270	227	lbs.
	32	179	161	142	123	103	kg.

Water-cooled icemaker capacity/24 hrs.

Inlet Water Temperature F/C	Ambient Air Temperature F/C						
	F	60	70	80	90	100	
	C	16	21	27	32	38	
	50	451	447	442	437	428	lbs
	10	204	202	200	199	194	kg
	60	423	413	409	399	394	lbs
	16	192	187	185	181	179	kg
	70	394	390	380	371	361	lbs
	21	179	177	172	168	163	kg
	80	371	361	352	342	333	lbs
	27	168	163	160	155	151	kg
	90	352	342	333	323	309	lbs
	32	160	155	151	146	140	kg

Operating Limits

Ambient air temp. range – 50 F to 100 F (10 C to 38 C)
Water temp. range – 40 F to 90 F (5 C to 32 C)
Potable water pressure – 10 psi to 70 psi (69kpa to 483kpa)
Condenser water pressure – 10 psi to 150 psi (69kpa to 1035kpa) maximum

Standard electrical – 115V, 60Hz, 1 ph, 11 amps each, max. fuse 20 amps.
Alternate electrical – 220V, 60Hz, 1 ph and 230V, 50Hz, 1 ph. 5 amps each, max fuse 15 amps.

8 ft (2.4m) cord and NEMA 5-20 hospital-grade plug provided. Separate circuits and disconnects required for each icemaker.

Transport Tube

10 ft (3m) of insulated transport tube provided

Approximate Shipping Weight 160 lbs (73kg)

Dimensions

Overall Dimensions		
Height	Depth	Width
17.0 in (432mm)	water-cooled – 20.8 in (529mm) air-cooled* – 22.8 in (580mm)	18.9 in (480mm)

*Includes duct (not required for wall mount)

Water Flow Requirements for Water-Cooled Condensers

Water Temp. F˚/C˚	50/10	60/16	70/21
Water Flow:			
Gallons/100 lbs of ice	60	120	185
Liters/45kg of ice	227	454	700

Energy Consumption

KWH per 100 lbs (46kg) ice†	
Air-cooled	5.7
Water-cooled	5.0

† Air temp. 90 F (32 C); water temp. 70 F (21 C)

Heat Rejection Data

Model	Heat rejected in BTU/hr	
	to air	to water
Air-cooled	5000	n/a
Water-cooled	1400	3600

Water Consumption

12.6 gal (48L) of potable water usage per 100 lbs (46kg) of ice.

Chewblet is a registered trademark of Follett Corporation, registered in the US.
Follett reserves the right to change specifications at any time without obligation. Certifications may vary depending on country of origin.

FOLLETT
Innovative solutions, inspired by ice
801 Church Lane • Easton, PA 18040, USA
Toll free (800) 523-9361 • (610) 252-7301
Fax (610) 250-0696 • www.follettice.com

© Follett Corporation
Form #3490
04/08