Maestro™ top mount Chewblet® icemaker for Follett Harmony™ applications

MCD400AHT Series

Self-contained top mount icemakers for countertop ice and beverage dispensers:

MCD400AHT – Air-cooled, self-contained

Must be used with stainless steel Harmony top kit for dispenser, sold separately. Refer to chart on reverse for accessory numbers.

Model MCD400AHT on countertop ice and beverage dispenser, supplied by others

Compact, reliable icemaker for top mount installation on most countertop ice and beverage dispensers. Stainless steel exterior and interior frame. Environmentally-friendly R404A refrigerant. Production capacity approximately 400 lbs (181kg) of Chewblet ice in a 24-hour period.

High performance Maestro icemakers

- Stainless steel evaporator, auger and top bearing
- Oversized, heavy duty, tapered roller bearings ensure long low-maintenance life
- Icemaker can be cleaned without contaminating ice
- Quiet production; no noisy harvest cycles

Lower utility bills

- Energy-efficient, no costly defrost cycles
- 25% less energy than comparable capacity cube machines
- 40% less water than comparable capacity cube machines

Low-profile design

- Only 17" (432mm) high; fits under 8 foot ceilings when mounted on beverage dispenser

Consumer-preferred Chewblet ice

- Preferred over cubes by more than 2:1
- Easy to chew
- More reliable dispensing than nugget or pellet ice
- Slow melting, maintains drink temperature and quality
- Drink performance comparable to cubes
- Higher displacement than cube ice

Installation flexibility

- Harmony kits allow icemaker to top mount on most ice dispensers
- Kits install without any alteration to dispenser. Kit includes stainless steel top.
- Access to storage hopper for easy cleaning and sanitizing of ice storage area

Accessories

- Water filter kit (item# 00130229)
- SafeCLEAN™ environmentally-responsible ice machine cleaner (item# 00132001)

FOLLETT
Innovative solutions, inspired by ice

801 Church Lane • Easton, PA 18040, USA
Toll free (800) 523-9361 • (610) 252-7301
Fax (610) 250-0696 • www.follettice.com

© Follett Corporation

Form #2620

MCD400AHT Series

Maestro™ top mount Chewblet® icemaker for Follett Harmony™ applications

Front View

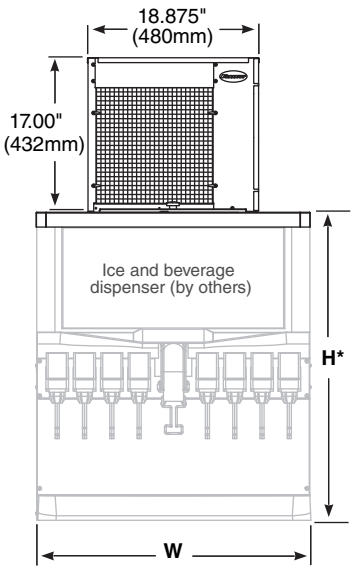

Side View

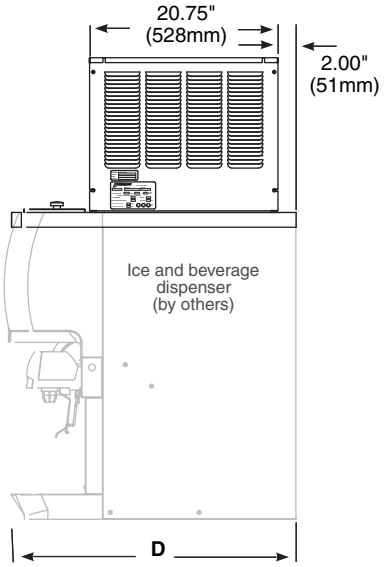

Icemaker Connections

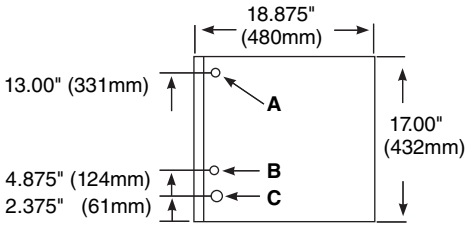

A – Electrical
B – 3/8" OD push-in water inlet
C – 3/4" MPT drain

6" (152mm) minimum clearance from exhaust side of icemaker

Icemaker Plug Configuration NEMA 5-20

U.S. Patent 6,134,908

* Net height after installation of top kit.

Harmony Top kit accessories

Manufacturer/ Model number	W = Width in (mm)	D = Depth in (mm)	H* = Height in (mm)	Harmony Top Kit
Lancer dispensers				
4500-22N	22.0 (559)	30.5 (775)	36.50 (928)	MTL22SC
4500-30N	30.0 (762)	30.5 (775)	36.50 (928)	MTL30SC
FS-30N	30.0 (762)	30.5 (775)	42.13 (1070)	MTL30SC
Remcor/Cornelius dispensers				
DF/ED150 Series	22.0 (559)	30.0 (762)	34.38 (874)	MTC22SC
DF/ED175 Series	24.5 (623)	30.0 (762)	34.38 (874)	MTC24SC
DF/ED200 Series	30.0 (762)	30.0 (762)	34.38 (874)	MTC30SC
DF/ED250 Series	30.0 (762)	30.0 (762)	38.38 (975)	MTC30SC

For other applications, contact factory.

Operating Limits

Ambient air temp. range – 50 F to 100 F (10 C to 38 C)
Water temp. range – 45 F to 90 F (7 C to 32 C)
Potable water pressure – 10 psi to 70 psi (69kpa to 483kpa)

Electrical

Standard electrical – 115V, 60Hz, 1 ph, 11 amps each, max. fuse 20 amps
Alternate electrical – 220V, 60Hz, 1 ph, 5 amps each, max. fuse 15 amps

8 ft (2.4m) cord and NEMA 5-20 hospital-grade plug provided. Separate circuits and disconnects required for each icemaker.

Approximate Shipping Weight 160 lbs (73kg)

Dimensions

Overall Dimensions		
Height	**Depth**	**Width**
17.0 in (432mm)	20.8 in (529mm)	18.9 in (480mm)

Ice Production

Air-cooled icemaker capacity/24 hrs.

Inlet Water Temperature °F/°C	Ambient Air Temperature °F/°C						
	F	60	70	80	90	100	
	C	16	21	27	32	38	
	50	510	454	397	335	273	lbs.
	10	232	206	180	152	124	kg.
	60	482	435	389	329	270	lbs.
	16	219	198	177	150	123	kg.
	70	454	417	380	323	266	lbs.
	21	206	190	173	147	121	kg.
	80	424	385	347	297	247	lbs.
	27	193	175	158	135	112	kg.
	90	394	354	313	270	227	lbs.
	32	179	161	142	123	103	kg.

Energy Consumption

KWH per 100 lbs (46kg) ice†	
Air-cooled	5.7

† Air temp. 90 F (32 C); water temp. 70 F (21 C)

Heat Rejection Data

Model	Heat rejected in BTU/hr to air
Air-cooled	5000

Water Consumption

12.6 gal (48L) of potable water usage per 100 lbs (46kg) of ice.

Chewblet is a registered trademark of Follett Corporation, registered in the US.
Follett reserves the right to change specifications at any time without obligation. Certifications may vary depending on country of origin.

FOLLETT
Innovative solutions, inspired by ice

801 Church Lane • Easton, PA 18040, USA
Toll free (800) 523-9361 • (610) 252-7301
Fax (610) 250-0696 • www.follettice.com

© Follett Corporation
Form #2620
04/08