Kold-Draft brings commercial-grade ice home with a residential, under-counter ice maker featuring the Kold-Draft system.

What makes Kold-Draft different?

The Kold-Draft system differs from others with a unique process that eliminates minerals and foreign substances before the water forms into cubes producing pure, hard ice – often eliminating the need for expensive water filter systems. Kold-Draft's premium ice cools drinks quickly without diluting or distorting flavor.

PURE, SLOW-MELTING ICE.
YOU'LL TASTE THE DIFFERENCE.

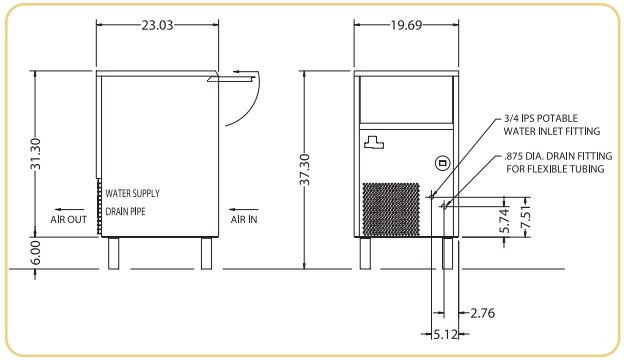

General Specifications for ICE BUTLER:

Plumbing:
3/4" IPS potable water inlet fitting
.875" Dia. flex tubing drain

Exterior Finish:
Type 300 Series stainless steel

Refrigerant:
R-404A HFC

Clearance Requirements:
Allow 2" (5cm) each side

ICE BUTLER Air-Cooled:

Incoming Water Temp.	Ambient Temp. 70°F (21°C)	Ambient Temp. 90°F (32°C)
50°F (10°C)	110 lbs. (50kg)	—
70°F (21°C)	—	78 lbs. (35kg)

Recommended Operating Requirements:

	Min.	Max.
Air Temperatures	50°F (10°C)	95°F (35°C)
Water Temperatures	41°F (5°C)	95°F (35°C)
Water Pressures	15	73 PSIG

KOLD-DRAFT WARRANTY

We are the cold standard in ice. Our two-year warranty on parts and labor is a promise of performance.

For more information and to order please visit our website at

www.ice-butler.com

814-453-6761 • 800-840-9577 • Fax: 800-548-9392

ICE BUTLER
KOLD-DRAFT

PURE, SLOW-MELTING ICE
AT YOUR SERVICE.

NOW AVAILABLE FOR YOUR HOME ...

the same commercial-grade ice that's served in fine restaurants, hotels and on cruise ships.

PURE, SLOW-MELTING ICE
AT YOUR SERVICE.

ICE BUTLER
KOLD-DRAFT

www.ice-butler.com

Perfect for patios, kitchens and wet bars, Kold-Draft's commercial-grade Ice Butler:

- produces up to 110 pounds of ice per day
- features upscale appliance finish of bold stainless steel
- neatly installs under counters

A LOT OF ICE IN A LITTLE SPACE!

Internationally, fine restaurants, hotels and cruise lines have selected Kold-Draft as their supplier of choice for more than 50 years. In the hospitality industry, we demonstrate our reputation for innovation and pure dependability with equipment that provides uninterrupted service spanning generations of restaurant owners who marvel at the fact that Kold-Draft equipment never stops working.

Now, you can bring those same luxuries home with the Ice Butler – at your service for you and your guests. Enjoy the pure ice and dependability that the most-prestigious restaurants, hotels and cruise lines choose – Kold-Draft, *the cold standard in ice.*

YOU'LL TASTE THE DIFFERENCE.

PURE, SLOW-MELTING ICE AT YOUR SERVICE.

ICE BUTLER
KOLD-DRAFT

www.ice-butler.com