S H E L F F R E E Z E R

COMPACT FREEZER

AT YOUR FINGERTIPS

- Low temperature storage where you need it.
- Great on a counter or on a shelf.
- High luster stainless steel exterior.
- Extra heavy-duty magnetic door gasket.

Model SKSF

SILVER KING®

WE'VE GOT REFRIGERATION DOWN COLD™

SHELF FREEZER SPECIFICATIONS

MODEL SKSF

EXTERIOR	Stainless steel. Galvanized back. Stainless steel back optional.
INTERIOR	Corrosion-resistant material with coved corners throughout for fast, easy, cleaning and sanitation.
INSULATION	Environmentally friendly foamed-in-place polyurethane insulation for maximum insulation, strength and durability.
DOOR	Polyurethane insulation, extruded aluminum frame, stainless steel exterior door panel and extra heavy-duty magnetic "Thermo Rubber" door gasket combine to make the toughest, longest lasting door in the industry.
SHELF	Heavy gauge wire shelf is hand-dipped, to provide double layer epoxy coating for superior durability and smooth handling. Adjustable 1/2" increments on stainless steel pilasters.
REFRIGERATION	CFC-free, R401a refrigerant, hermetically sealed, high efficiency, self contained refrigeration system features automatic defrost and forced air circulation. Adjustable temperature control and built-in temperature indicator standard. Automatic condensate evaporator means no plumbing is required.
ELECTRICAL	Standard 115 volt, 60Hz, single phase. 8 foot, 3-wire power cord with NEMA 5-15 plug.
OPTIONS	Stainless steel back, 1 5/8" casters.
WARRANTY	One year materials and workmanship warranty on cabinet and refrigeration system. Five year warranty on compressor.

MODEL	LENGTH	DEPTH	HEIGHT	STORAGE CAPACITY	AMPS	COMPRESSOR	SHIPPING WEIGHT
SKSF	27 1/2"	32 7/8"	20"	4.4 cu. ft.	5.3	1/3 hp	130lbs

Specifications subject to change without notice.

(numbers in parenthesis are centimeters)

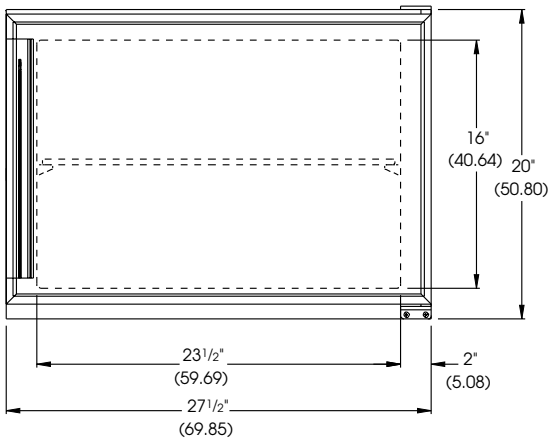

FRONT VIEW

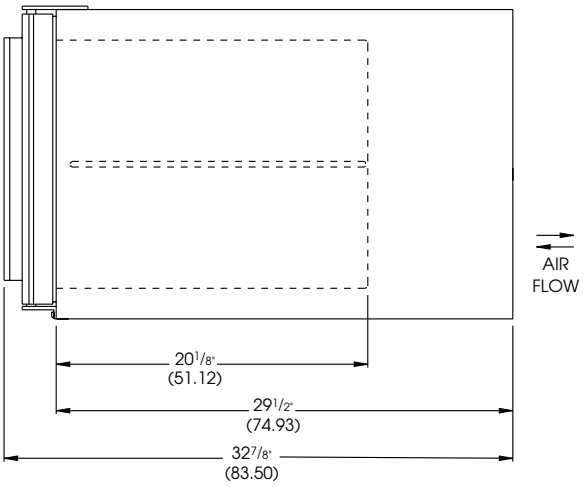

SIDE VIEW

SILVER KING®
WE'VE GOT REFRIGERATION DOWN COLD™

1600 Xenium Lane North
Minneapolis, MN 55441-3787
Phone (763) 923-2441
Fax (763) 553-1209
www.silverking.com

#FN9816
© Silver King 2002
Printed in U.S.A.